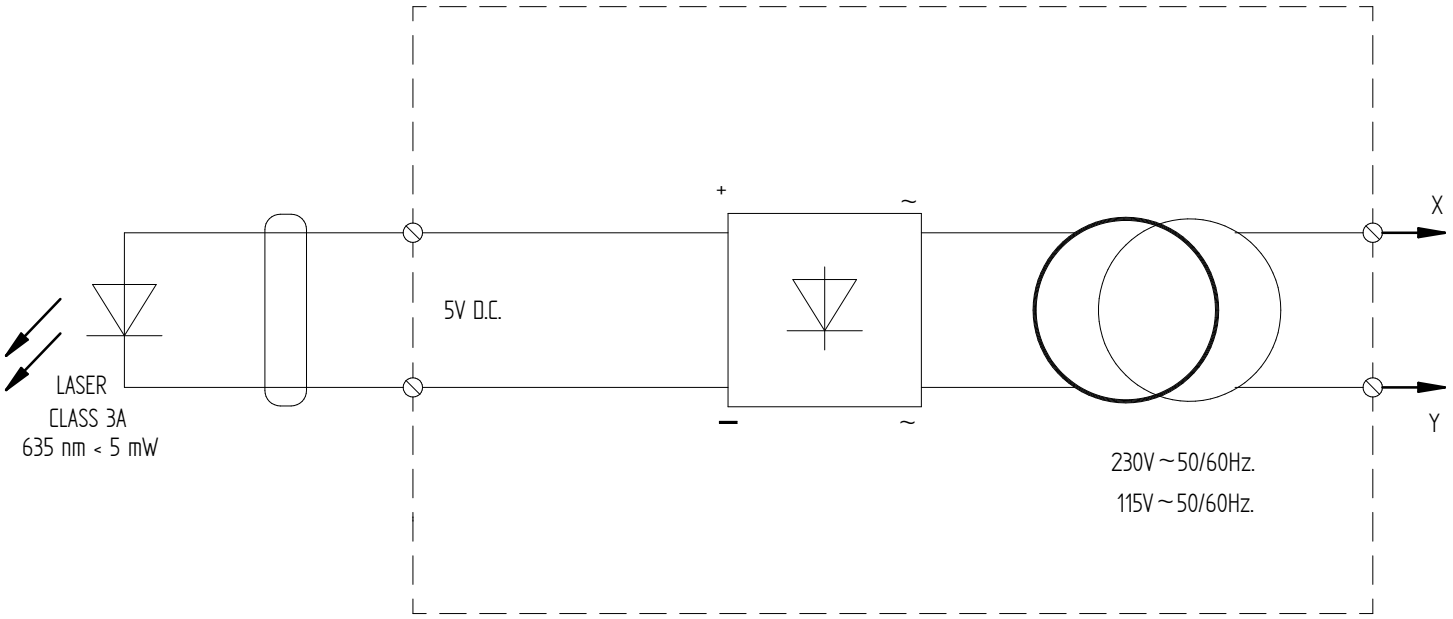

05 SP65020/900 (670–900)
SP65020/1100 (1100)

M4x20

M4

04 – SP90137

RED (+)

BLACK (–)

02 – SP70068

02 – SP70068

02 – SP70068

06– SP90079

B

(+)

(–)

M3x8

03 – SP65003

02 – SP70068

02 – SP70068

09 – SP90059

07 SP90138P (230V ~ 50/60Hz.)
SP90138P/A (115V ~ 50/60Hz.)

C

08 SP90244 (230V~50/60Hz.)
SP90243 (115V~50/60Hz.)

02 – SP70068

02 – SP70068

01– SP65008

X

sp_v7

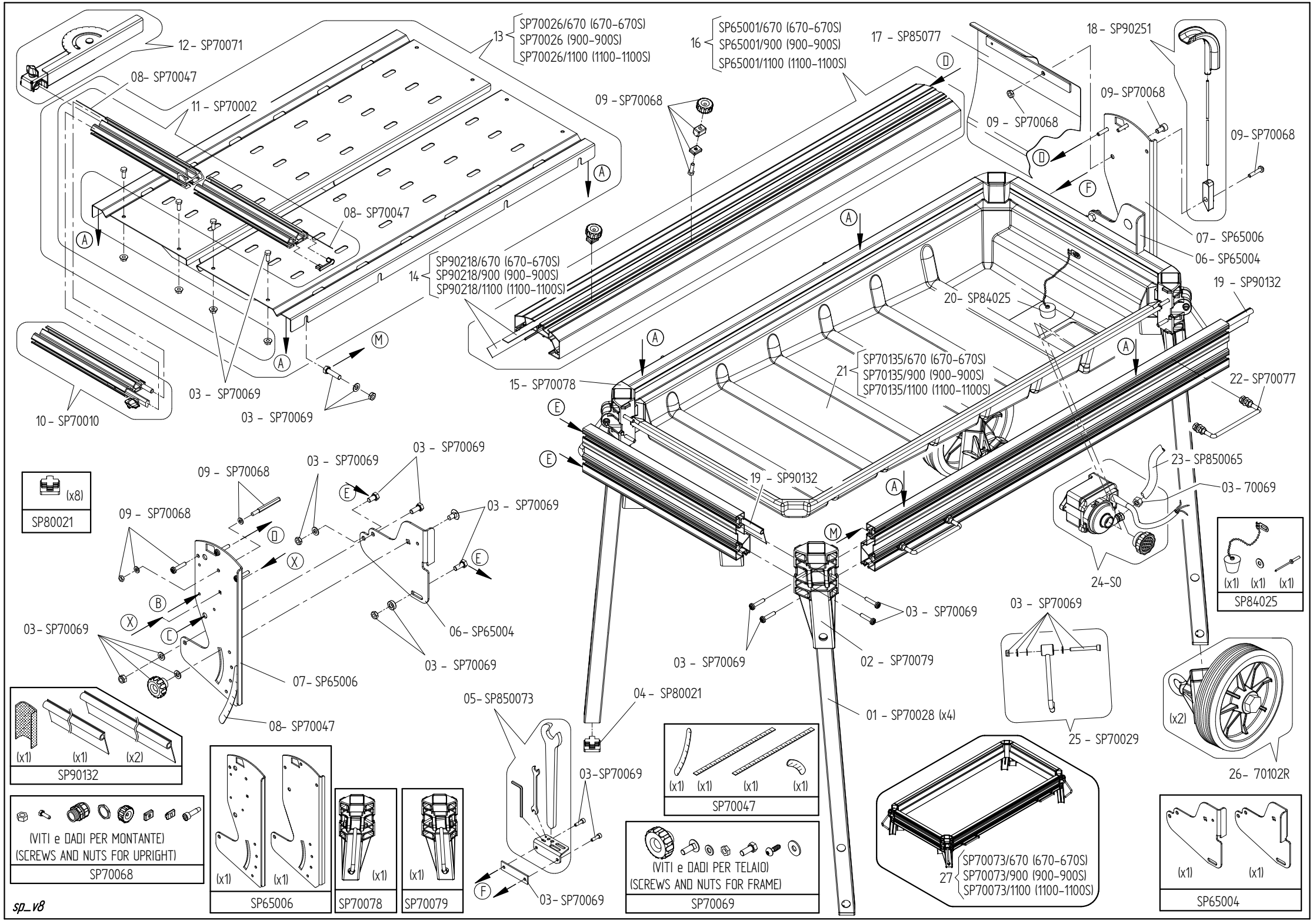
12 - SP70071
08- SP70047
11 - SP70002
13 SP70026/670 (670-670S)
SP70026 (900-900S)
SP70026/1100 (1100-1100S)
16 SP65001/670 (670-670S)
SP65001/900 (900-900S)
SP65001/1100 (1100-1100S)
17 - SP85077
18 - SP90251
09 - SP70068
09 - SP70068
09- SP70068
09- SP70068
08- SP70047
14 SP90218/670 (670-670S)
SP90218/900 (900-900S)
SP90218/1100 (1100-1100S)
07- SP65006
06- SP65004
19 - SP90132
20- SP84025
21 SP70135/670 (670-670S)
SP70135/900 (900-900S)
SP70135/1100 (1100-1100S)
22- SP70077
15- SP70078
03 - SP70069
03 - SP70069
10 - SP70010
23- SP850065
03 - 70069
19 - SP90132
24-S0
(x8)
SP80021
09 - SP70068
03 - SP70069
03 - SP70069
09 - SP70068
03 - SP70069
03 - SP70069
06- SP65004
03 - SP70069
03 - SP70069
02 - SP70079
03 - SP70069
03 - SP70069
03- SP70069
07- SP65006
08- SP70047
(x1) (x1) (x1)
SP84025
(x1) (x1) (x2)
SP90132
05- SP850073
04 - SP80021
01 - SP70028 (x4)
25 - SP70029
(x2)
26- 70102R
03-SP70069
(x1) (x1) (x1) (x1)
SP70047
(VITI e DADI PER MONTANTE)
(SCREWS AND NUTS FOR UPRIGHT)
SP70068
(x1) (x1)
SP65006
(x1)
SP70078
(x1)
SP70079
03- SP70069
(VITI e DADI PER TELAIO)
(SCREWS AND NUTS FOR FRAME)
SP70069
27 SP70073/670 (670-670S)
SP70073/900 (900-900S)
SP70073/1100 (1100-1100S)
(x1) (x1)
SP65004
sp_v8

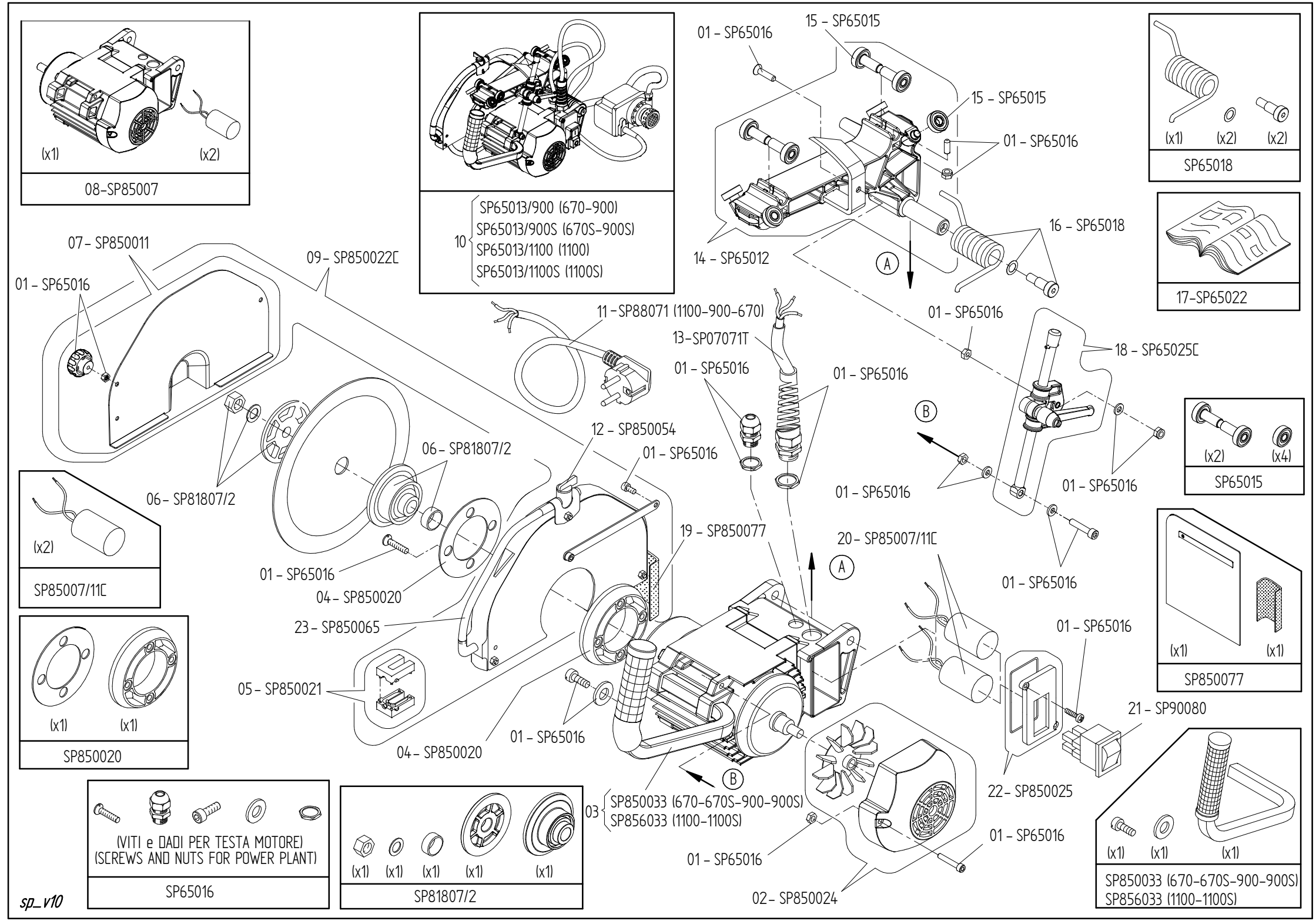
(x1)
(x2)
08-SP85007
10
SP65013/900 (670-900)
SP65013/900S (670S-900S)
SP65013/1100 (1100)
SP65013/1100S (1100S)
01 - SP65016
15 - SP65015
15 - SP65015
01 - SP65016
16 - SP65018
14 - SP65012
A
(x1)
(x2)
(x2)
SP65018
17-SP65022
07 - SP850011
09 - SP850022C
01 - SP65016
11 - SP88071 (1100-900-670)
13-SP07071T
01 - SP65016
01 - SP65016
01 - SP65016
18 - SP65025C
B
(x2)
(x4)
SP65015
12 - SP850054
06 - SP81807/2
01 - SP65016
06 - SP81807/2
01 - SP65016
01 - SP65016
(x2)
SP85007/11C
19 - SP850077
20 - SP85007/11C
A
01 - SP65016
01 - SP65016
04 - SP850020
23 - SP850065
01 - SP65016
(x1)
(x1)
SP850077
05 - SP850021
(x1)
(x1)
SP850020
01 - SP65016
21 - SP90080
04 - SP850020
B
22 - SP850025
03
SP850033 (670-670S-900-900S)
SP856033 (1100-1100S)
01 - SP65016
01 - SP65016
(VITI e DADI PER TESTA MOTORE)
(SCREWS AND NUTS FOR POWER PLANT)
SP65016
(x1)
(x1)
(x1)
(x1)
(x1)
SP81807/2
02 - SP850024
(x1)
(x1)
(x1)
SP850033 (670-670S-900-900S)
SP856033 (1100-1100S)
sp_v10