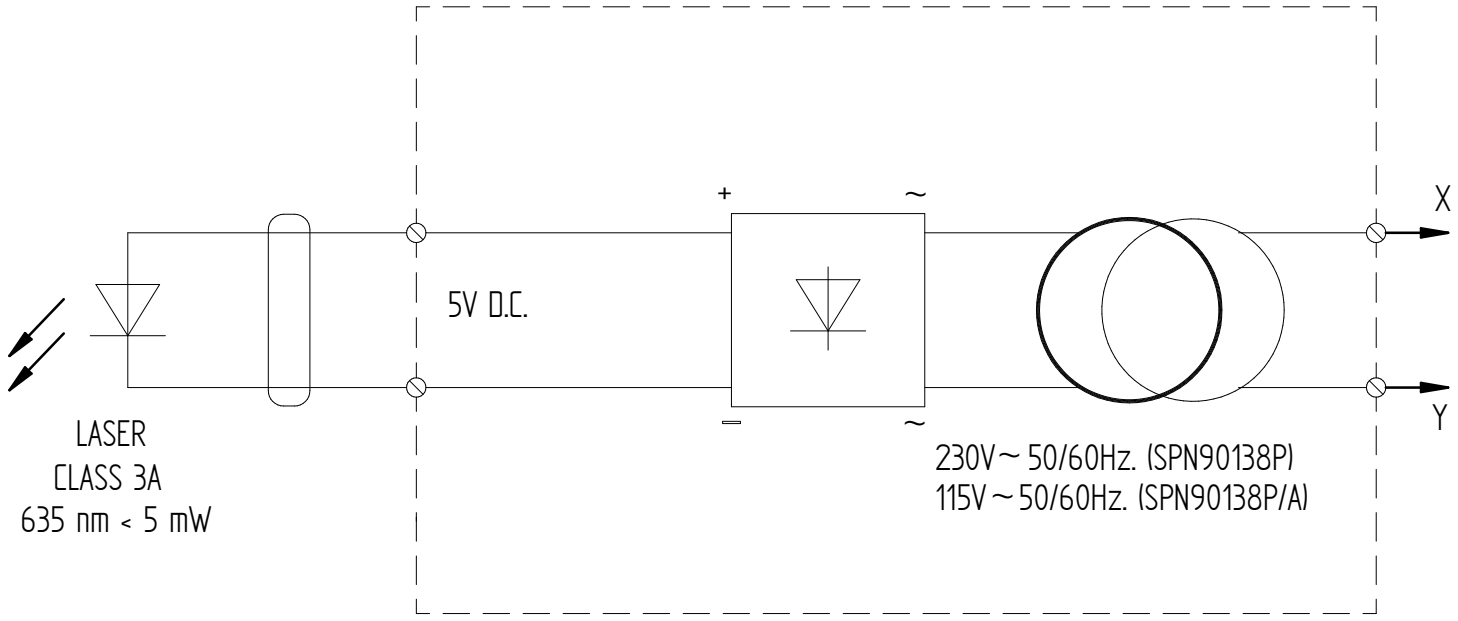
+
~
X
5V D.C.
LASER
CLASS 3A
635 nm < 5 mW
–
~
Y
230V~ 50/60Hz. (SPN90138P)
115V~ 50/60Hz. (SPN90138P/A)

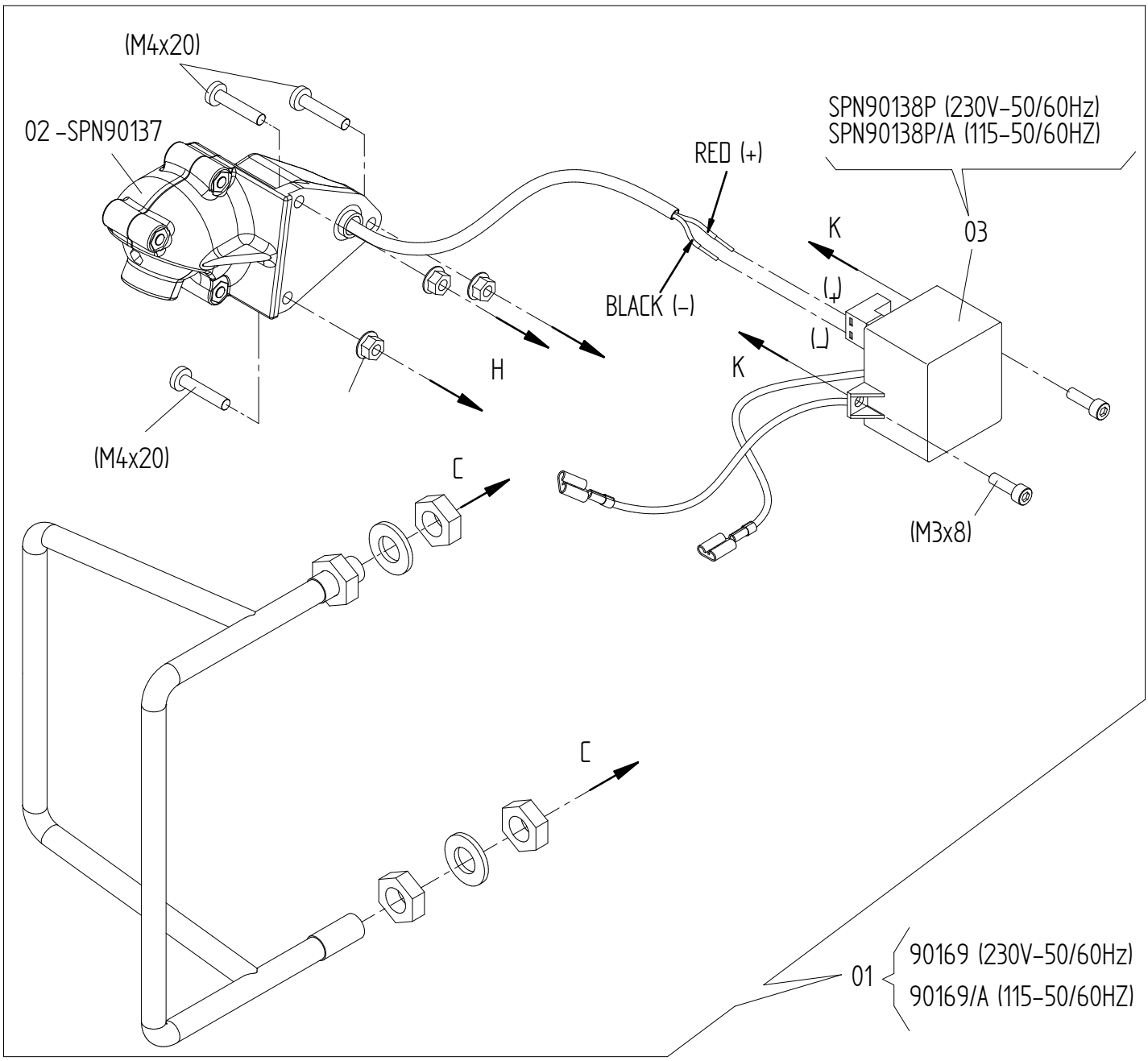
(M4x20)
02 –SPN90137
SPN90138P (230V–50/60Hz)
SPN90138P/A (115–50/60HZ)
RED (+)
K
03
BLACK (–)
(+)
(–)
H
K
(M4x20)
C
(M3x8)
C
01
90169 (230V–50/60Hz)
90169/A (115–50/60HZ)

sp_v3

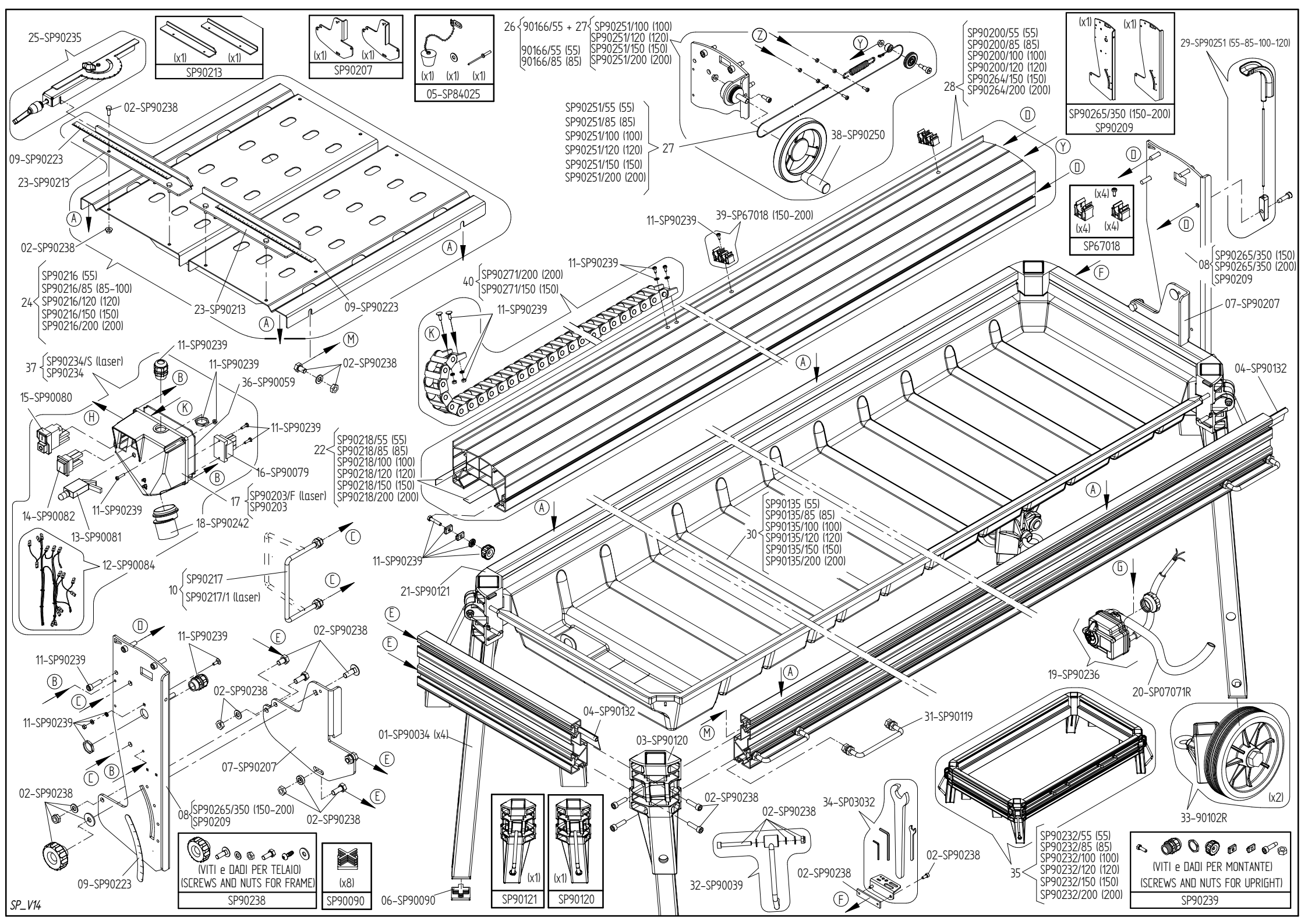
25-SP90235
SP90213
(x1) (x1)
SP90207
(x1) (x1)
05-SP84025
(x1) (x1) (x1)
26 90166/55 + 27 SP90251/100 (100)
SP90251/120 (120)
SP90251/150 (150)
SP90251/200 (200)
90166/55 (55)
90166/85 (85)
SP90200/55 (55)
SP90200/85 (85)
SP90200/100 (100)
SP90200/120 (120)
SP90264/150 (150)
SP90264/200 (200)
28
SP90265/350 (150-200)
SP90209
29-SP90251 (55-85-100-120)
02-SP90238
09-SP90223
23-SP90213
SP90251/55 (55)
SP90251/85 (85)
SP90251/100 (100)
SP90251/120 (120)
SP90251/150 (150)
SP90251/200 (200)
27
38-SP90250
11-SP90239
39-SP67018 (150-200)
(x4)
SP67018
SP90265/350 (150)
SP90265/350 (200)
SP90209
08
07-SP90207
24 SP90216 (55)
SP90216/85 (85-100)
SP90216/120 (120)
SP90216/150 (150)
SP90216/200 (200)
40 SP90271/200 (200)
SP90271/150 (150)
37 SP90234/S (laser)
SP90234
36-SP90059
15-SP90080
04-SP90132
22 SP90218/55 (55)
SP90218/85 (85)
SP90218/100 (100)
SP90218/120 (120)
SP90218/150 (150)
SP90218/200 (200)
16-SP90079
17 SP90203/F (laser)
SP90203
14-SP90082
13-SP90081
18-SP90242
12-SP90084
10 SP90217
SP90217/1 (laser)
21-SP90121
30 SP90135 (55)
SP90135/85 (85)
SP90135/100 (100)
SP90135/120 (120)
SP90135/150 (150)
SP90135/200 (200)
19-SP90236
20-SP07071R
01-SP90034 (x4)
03-SP90120
31-SP90119
33-90102R
(x2)
34-SP03032
32-SP90039
35 SP90232/55 (55)
SP90232/85 (85)
SP90232/100 (100)
SP90232/120 (120)
SP90232/150 (150)
SP90232/200 (200)
06-SP90090
(VITI e DADI PER TELAIO)
(SCREWS AND NUTS FOR FRAME)
SP90238
(x8)
SP90090
(x1) (x1)
SP90121 SP90120
(VITI e DADI PER MONTANTE)
(SCREWS AND NUTS FOR UPRIGHT)
SP90239
SP_V14

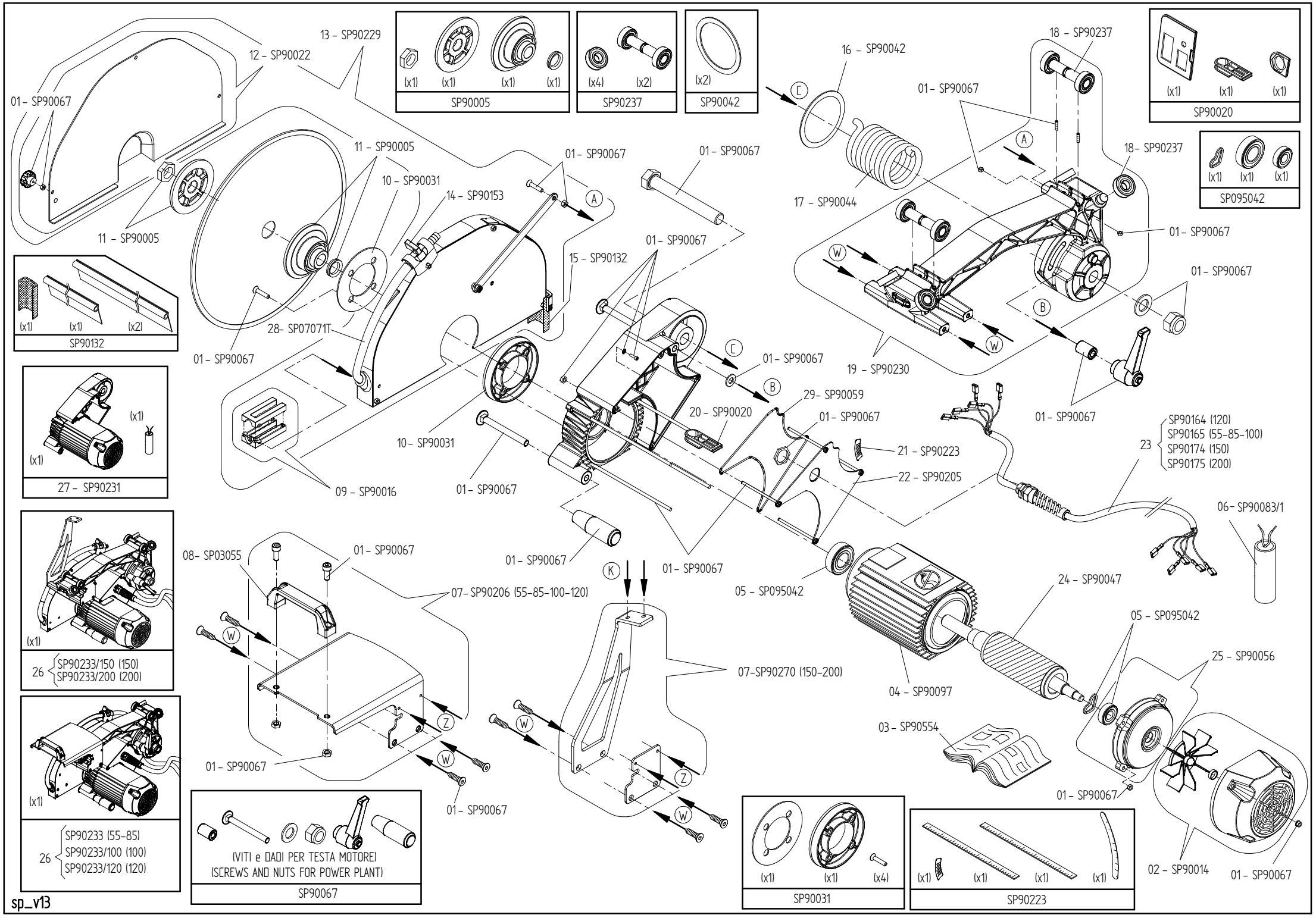
01- SP90067
12 - SP90022
13 - SP90229
11 - SP90005
11 - SP90005
10 - SP90031
14 - SP90153
01- SP90067
01- SP90067
15 - SP90132
01- SP90067
28- SP07071T
01- SP90067
09 - SP90016
10 - SP90031
01- SP90067
01- SP90067
01- SP90067
01- SP90067
20 - SP90020
29- SP90059
01- SP90067
21 - SP90223
22 - SP90205
01- SP90067
01- SP90067
08- SP03055
01- SP90067
07- SP90206 (55-85-100-120)
01- SP90067
01- SP90067
07-SP90270 (150-200)
01- SP90067
05 - SP095042
24 - SP90047
04 - SP90097
05 - SP095042
25 - SP90056
03 - SP90554
01- SP90067
02 - SP90014
01- SP90067
16 - SP90042
17 - SP90044
18 - SP90237
01- SP90067
18- SP90237
01- SP90067
19 - SP90230
01- SP90067
01- SP90067
23
SP90164 (120)
SP90165 (55-85-100)
SP90174 (150)
SP90175 (200)
06- SP90083/1
(x1) (x1) (x1) (x1)
SP90005
(x4) (x2)
SP90237
(x2)
SP90042
(x1) (x1) (x1)
SP90020
(x1) (x1) (x1)
SP095042
(x1) (x1) (x2)
SP90132
(x1) (x1)
27 - SP90231
(x1)
26
SP90233/150 (150)
SP90233/200 (200)
(x1)
26
SP90233 (55-85)
SP90233/100 (100)
SP90233/120 (120)
(VITI e DADI PER TESTA MOTORE)
(SCREWS AND NUTS FOR POWER PLANT)
SP90067
(x1) (x1) (x4)
SP90031
(x1) (x1) (x1) (x1)
SP90223
sp_v13