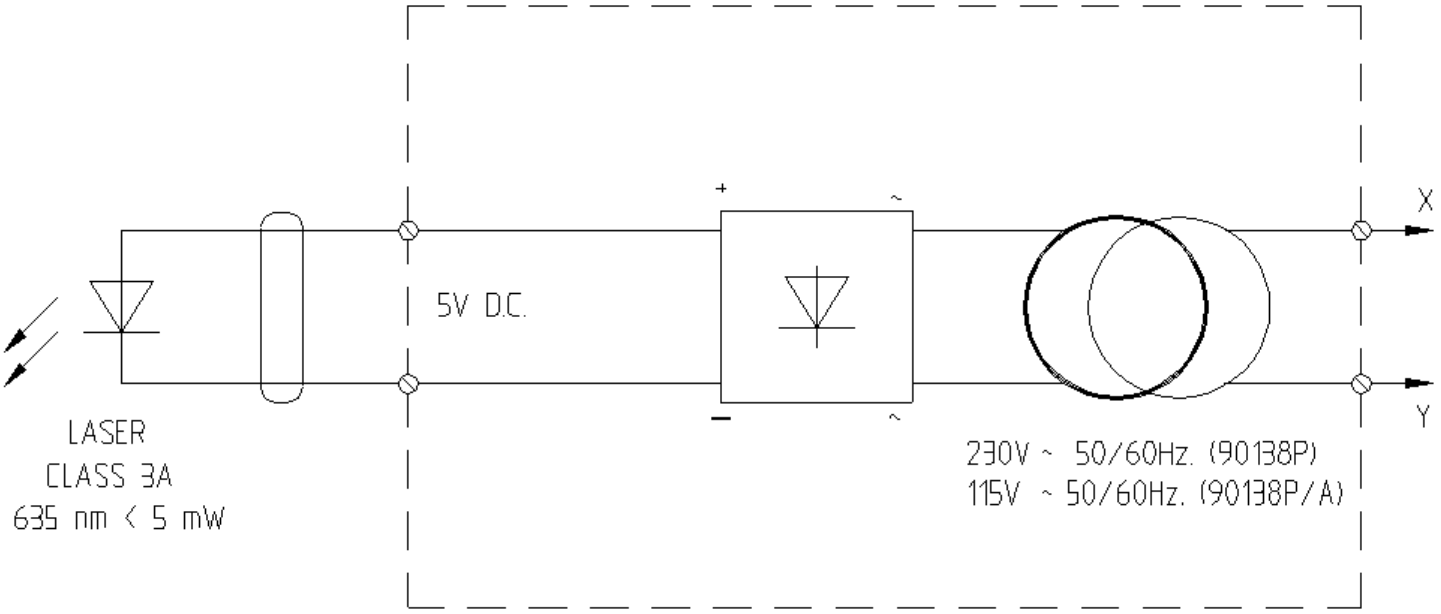

(M4x20)

02-SP90137

SP90138P (230V-50/60Hz)
SP90138P/A (115-50/60HZ)

RED (+)

K

03

(+)

BLACK (-)

(-)

H

K

(M4x20)

C

(M3x8)

C

01 { 90169 (230V-50/60Hz)
90169/A (115-50/60HZ)

SP.V3

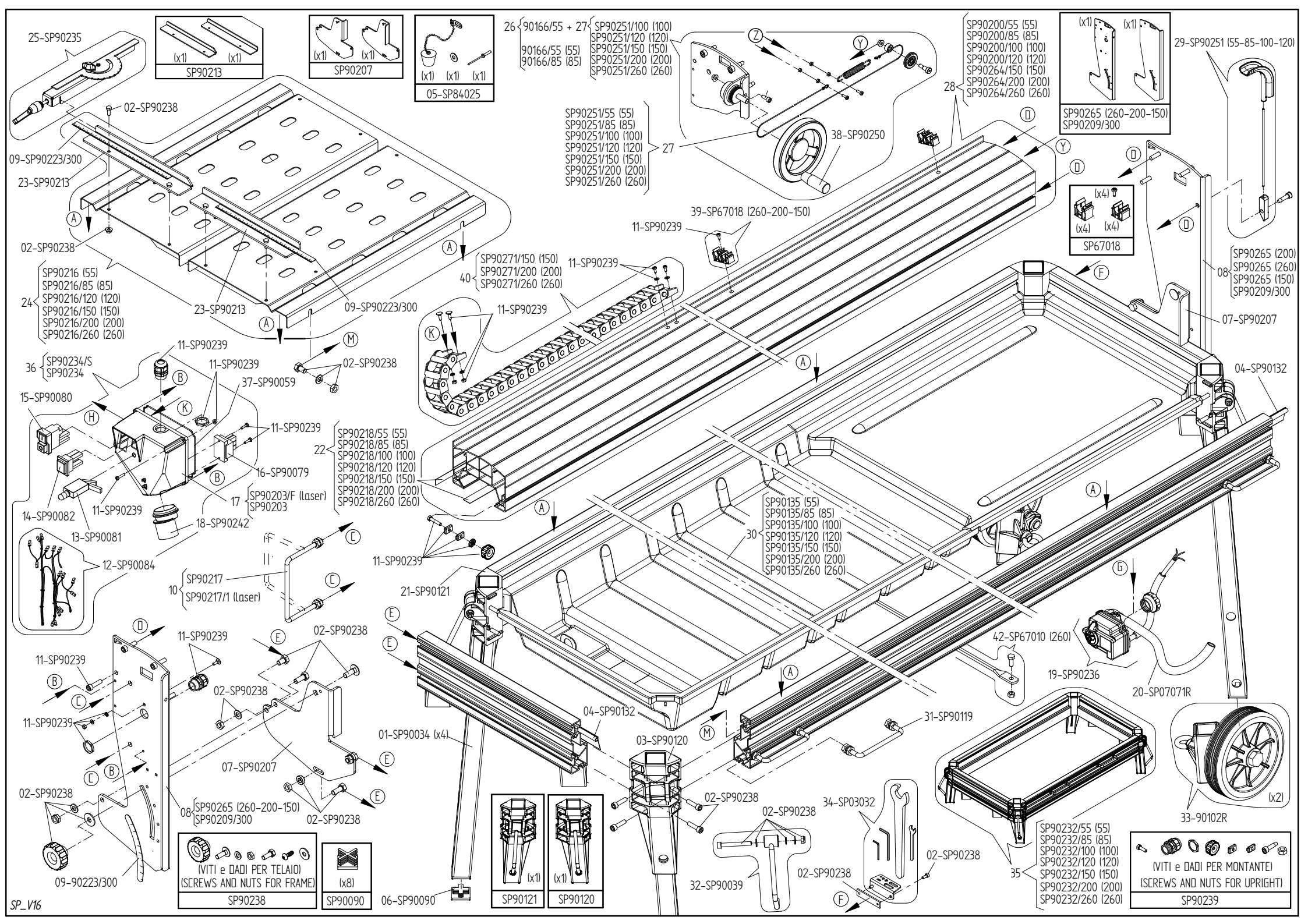
25-SP90235
SP90213 (x1) (x1)
SP90207 (x1) (x1)
05-SP84025 (x1) (x1) (x1)
26 90166/55 + 27 SP90251/100 (100) SP90251/120 (120) SP90251/150 (150) SP90251/200 (200) SP90251/260 (260)
90166/55 (55) 90166/85 (85)
SP90200/55 (55) SP90200/85 (85) SP90200/100 (100) SP90200/120 (120) SP90264/150 (150) SP90264/200 (200) SP90264/260 (260)
28
SP90265 (260-200-150) SP90209/300 (x1) (x1)
29-SP90251 (55-85-100-120)
SP90251/55 (55) SP90251/85 (85) SP90251/100 (100) SP90251/120 (120) SP90251/150 (150) SP90251/200 (200) SP90251/260 (260)
27
38-SP90250
02-SP90238
09-SP90223/300
23-SP90213
39-SP67018 (260-200-150)
11-SP90239
SP67018 (x4) (x4) (x4)
40 SP90271/150 (150) SP90271/200 (200) SP90271/260 (260)
24 SP90216 (55) SP90216/85 (85) SP90216/120 (120) SP90216/150 (150) SP90216/200 (200) SP90216/260 (260)
08 SP90265 (200) SP90265 (260) SP90265 (150) SP90209/300
07-SP90207
36 SP90234/S SP90234
37-SP90059
15-SP90080
04-SP90132
22 SP90218/55 (55) SP90218/85 (85) SP90218/100 (100) SP90218/120 (120) SP90218/150 (150) SP90218/200 (200) SP90218/260 (260)
16-SP90079
17 SP90203/F (laser) SP90203
14-SP90082
13-SP90081
18-SP90242
12-SP90084
10 SP90217 SP90217/1 (laser)
30 SP90135 (55) SP90135/85 (85) SP90135/100 (100) SP90135/120 (120) SP90135/150 (150) SP90135/200 (200) SP90135/260 (260)
21-SP90121
42-SP67010 (260)
19-SP90236
20-SP07071R
01-SP90034 (x4)
03-SP90120
31-SP90119
33-90102R (x2)
34-SP03032
32-SP90039
35 SP90232/55 (55) SP90232/85 (85) SP90232/100 (100) SP90232/120 (120) SP90232/150 (150) SP90232/200 (200) SP90232/260 (260)
08 SP90265 (260-200-150) SP90209/300
09-90223/300
06-SP90090
SP90121 (x1)
SP90120 (x1)
(VITI e DADI PER TELAIO) (SCREWS AND NUTS FOR FRAME) SP90238
(x8) SP90090
(VITI e DADI PER MONTANTE) (SCREWS AND NUTS FOR UPRIGHT) SP90239
SP_V16

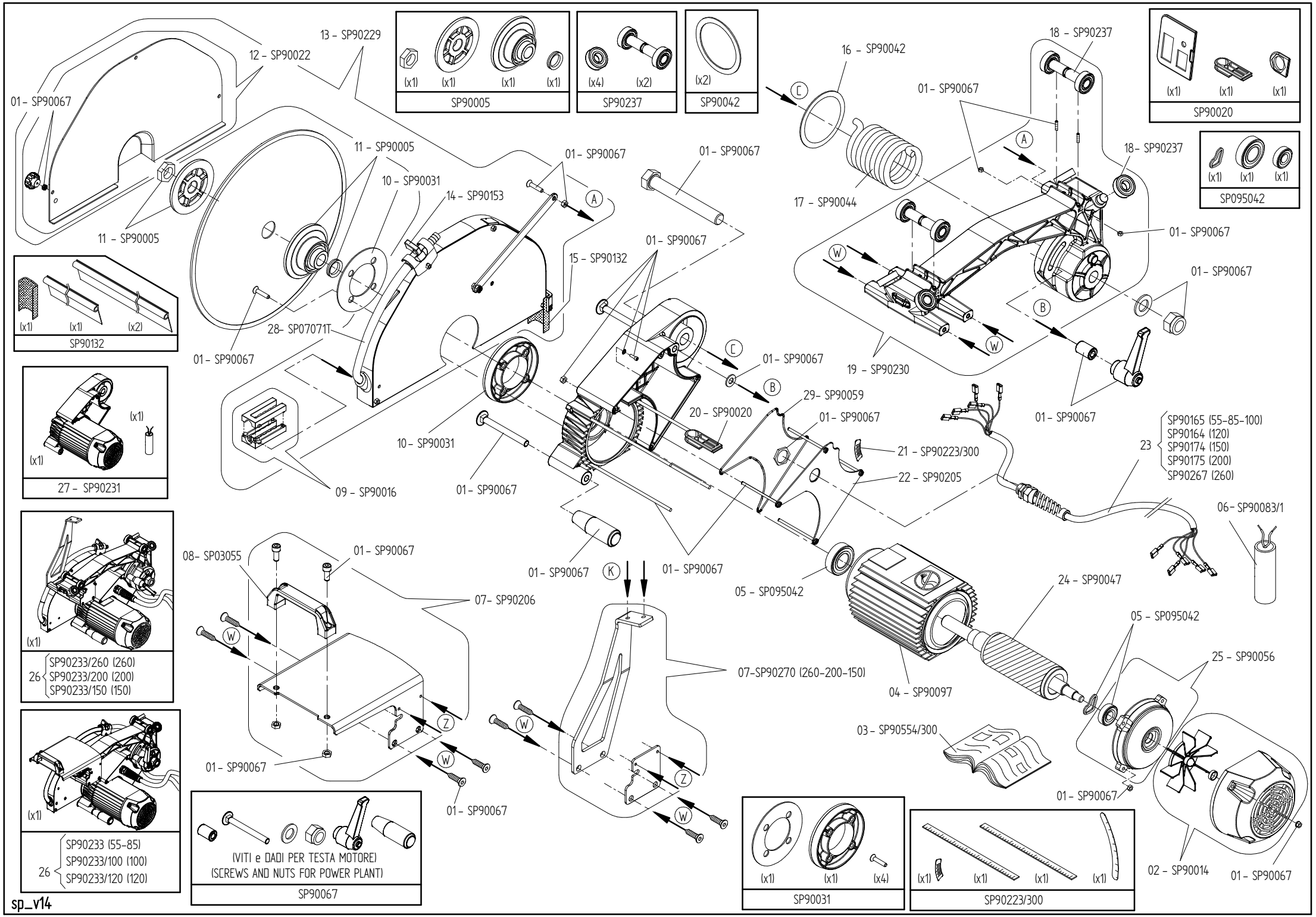
01- SP90067
12 - SP90022
13 - SP90229
11 - SP90005
11 - SP90005
10 - SP90031
14 - SP90153
01- SP90067
01- SP90067
15 - SP90132
01- SP90067
28- SP07071T
01- SP90067
09 - SP90016
10 - SP90031
01- SP90067
01- SP90067
01- SP90067
20 - SP90020
29- SP90059
01- SP90067
21 - SP90223/300
22 - SP90205
01- SP90067
01- SP90067
05 - SP095042
24 - SP90047
04 - SP90097
05 - SP095042
25 - SP90056
02 - SP90014
01- SP90067
06- SP90083/1
23
SP90165 (55-85-100)
SP90164 (120)
SP90174 (150)
SP90175 (200)
SP90267 (260)
16 - SP90042
17 - SP90044
18 - SP90237
18- SP90237
01- SP90067
01- SP90067
01- SP90067
19 - SP90230
01- SP90067
08- SP03055
01- SP90067
07- SP90206
01- SP90067
01- SP90067
01- SP90067
07-SP90270 (260-200-150)
01- SP90067
03 - SP90554/300
01- SP90067
01- SP90067
(x1) (x1) (x1) (x1)
SP90005
(x4) (x2)
SP90237
(x2)
SP90042
(x1) (x1) (x1)
SP90020
(x1) (x1) (x1)
SP095042
(x1) (x1) (x2)
SP90132
(x1) (x1)
27 - SP90231
(x1)
26
SP90233/260 (260)
SP90233/200 (200)
SP90233/150 (150)
(x1)
26
SP90233 (55-85)
SP90233/100 (100)
SP90233/120 (120)
(VITI e DADI PER TESTA MOTORE)
(SCREWS AND NUTS FOR POWER PLANT)
SP90067
(x1) (x1) (x4)
SP90031
(x1) (x1) (x1) (x1)
SP90223/300
A
B
C
W
Z
K

sp_v14